UNIVERSIDAD CARLOS III DE MADRID | Software Development – 2026

Professor: Juan Luis Vicente Carro

Submission Date: 24 April 2026

GUIDED EXERCISE 2B

Method 2: register_document(input_file: str)

Syntactic Analysis and Structural Test

Group: G87
Team: T08
Repository: G87.2026.T08.GE2b

Students:
- Kyle Chambers
- Mikail Mehmet Akin

UNIVERSIDAD CARLOS III DE MADRID | Software Development – 2026

Professor: Juan Luis Vicente Carro

Submission Date: 24 April 2026

1. GE2 2024 F2 Syntactic Analysis:

Grammar:

File::- BeginObject Fields EndObject

BeginObject::- {
EndObject::- }

Fields::- Field1 Seperator Field2

Field1::- LabelField1 Colon ValueField1
Seperator::- ,
Field2::- LabelField2 Colon ValueField2

LabelField1::- Quotation LabelVal1 Quotation
Colon::- :
ValueField1: Quotation Value1 Quotation
LabelField2: Quotation LabelVal2 Quotation
ValueField2: Quotation Value2 Quotation

Quotation::- “
LavelVal1::- PROJECT_ID
Value1::- |a|b|c|d|e|f|0|1|...|9 (32 of these)
LavelVal2::- FILENAME
Value2:::- <NAME><EXTENSION>

<NAME>::- |a…z|A…Z|0…9| (8 of these)
<EXTENSION>::- .pdf | .docx | .xslx

UNIVERSIDAD CARLOS III DE MADRID | Software Development – 2026

Professor: Juan Luis Vicente Carro

Submission Date: 24 April 2026

Derivation Tree:

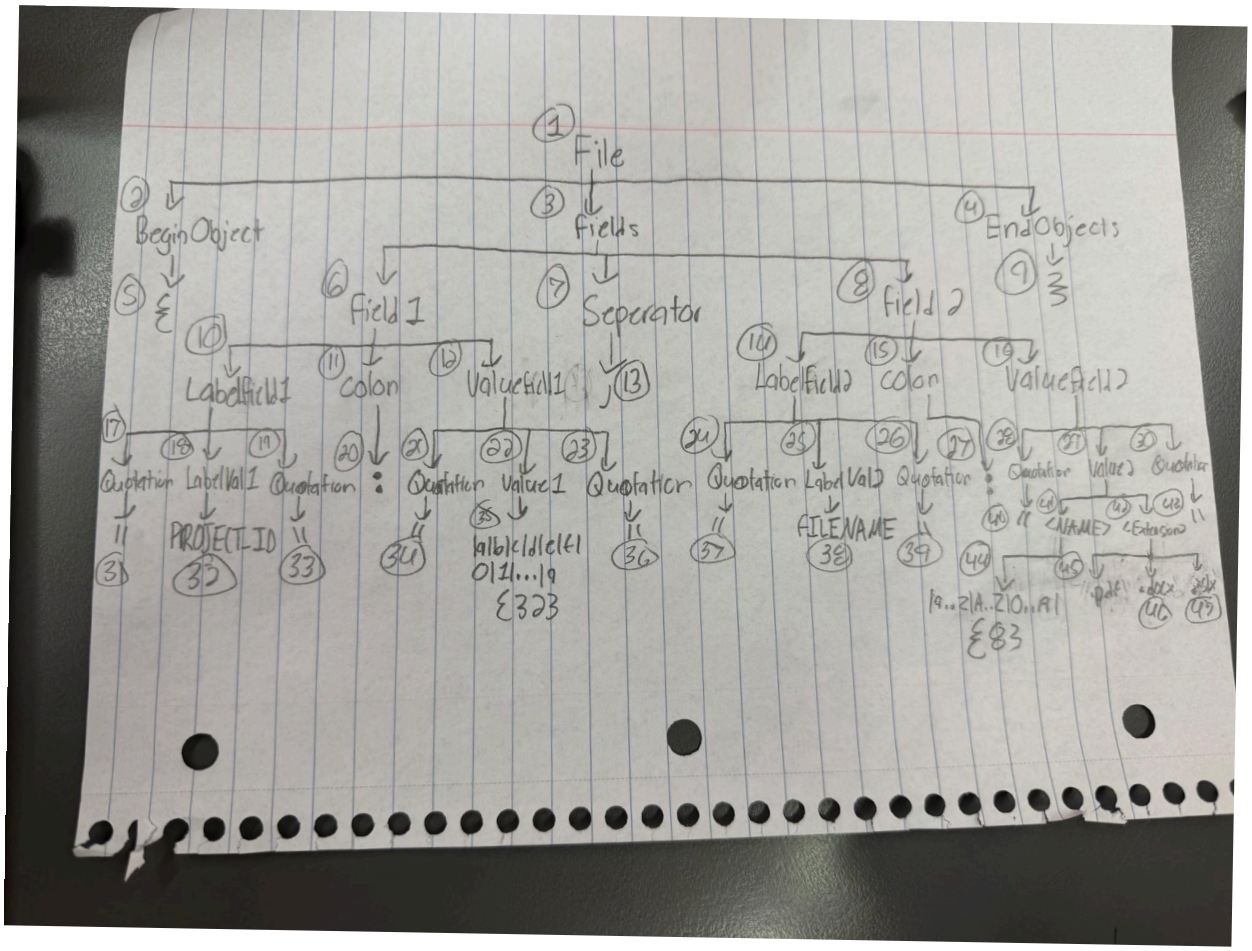

2. GE2 2024 F2 Structural Test:

Basic paths:

Based on the implemented logic for the `register_document` method, the control flow results in **6 basic paths**, which are visualized in the provided Flow Control Graph (Nodes 1 to 11, and F for Final).

Path 1: Invalid JSON Format

- **Path Sequence:** 1 → 2 → F
- **Condition:** The input file contains an invalid JSON string.
- **Flow:** The `json.loads(raw_data)` function fails, triggering the `except json.JSONDecodeError` block.
- **Result:** The method raises an `EnterpriseManagementException` with the message *"The file is not JSON formatted."*.

Path 2: Missing PROJECT_ID Key

- **Path Sequence:** 1 → 3 → 4 → F
- **Condition:** The JSON is valid, but the key `"PROJECT_ID"` is missing.

- **Flow:** The first condition of the logical OR statement (`"PROJECT_ID" not in data`) evaluates to True.
- **Result:** The method raises an `EnterpriseManagementException` with the message *"JSON does not have the expected structure."*.

Path 3: Missing FILENAME Key

- **Path Sequence:** 1 → 3 → 5 → 4 → F
- **Condition:** The JSON is valid and contains a `"PROJECT_ID"`, but the key `"FILENAME"` is missing.
- **Flow:** The first condition is False, but the second condition of the logical OR statement (`"FILENAME" not in data`) evaluates to True.
- **Result:** The method raises an `EnterpriseManagementException` with the message *"JSON does not have the expected structure."*.

Path 4: Invalid PROJECT_ID Value

- **Path Sequence:** 1 → 3 → 5 → 6 → 7 → 8 → F
- **Condition:** Both keys are present, but the `project_id` value does not match the required 32-character hexadecimal format.
- **Flow:** The regex validation `re.fullmatch(r"[0-9a-fA-F]{32}", project_id)` evaluates to False.
- **Result:** The method raises an `EnterpriseManagementException` with the message *"JSON data has no valid values."*.

Path 5: Invalid FILENAME Value

- **Path Sequence:** 1 → 3 → 5 → 6 → 7 → 9 → 10 → F
- **Condition:** The `project_id` is valid, but the `file_name` does not match the required format (exactly 8 alphanumeric characters followed by a valid extension: `.pdf`, `.docx`, or `.xlsx`).
- **Flow:** The regex validation `re.fullmatch(r"[a-zA-Z0-9]{8}\.(pdf|docx|xlsx)", file_name)` evaluates to False.
- **Result:** The method raises an `EnterpriseManagementException` with the message *"JSON data has no valid values."*.

Path 6: Valid Registration (Happy Path)

- **Path Sequence:** 1 → 3 → 5 → 6 → 7 → 9 → 11 → F
- **Condition:** The JSON is correctly formatted, both keys are present, and both values pass their respective regex validations.
- **Flow:** All error-handling `if`-statements are bypassed (evaluated as False). The method proceeds to instantiate the `ProjectDocument` class.
- **Result:** The SHA-256 signature is calculated, the document data is appended to `all_documents.json`, and the method successfully returns the SHA-256 signature.

UNIVERSIDAD CARLOS III DE MADRID | Software Development – 2026

Professor: Juan Luis Vicente Carro

Submission Date: 24 April 2026

Flow Control Graph:

Node Mapping:

- **Node 1:** `try: json.loads()`
- **Node 2:** `except json.JSONDecodeError:`
- **Node 3:** `if "PROJECT_ID" not in data:`
- **Node 4:** `raise Exception` (Missing Keys)
- **Node 5:** `or "FILENAME" not in data:`
- **Node 6:** Variable assignment (`project_id = ...`, `file_name = ...`)
- **Node 7:** `if not re.fullmatch(...)` (PROJECT_ID validation)
- **Node 8:** `raise Exception` (Invalid Values)
- **Node 9:** `if not re.fullmatch(...)` (FILENAME validation)
- **Node 10:** `raise Exception` (Invalid Values)
- **Node 11:** Happy Path (Instantiation, calculate SHA-256 signature, save to file, return)
- **Node F:** Final / Exit Node

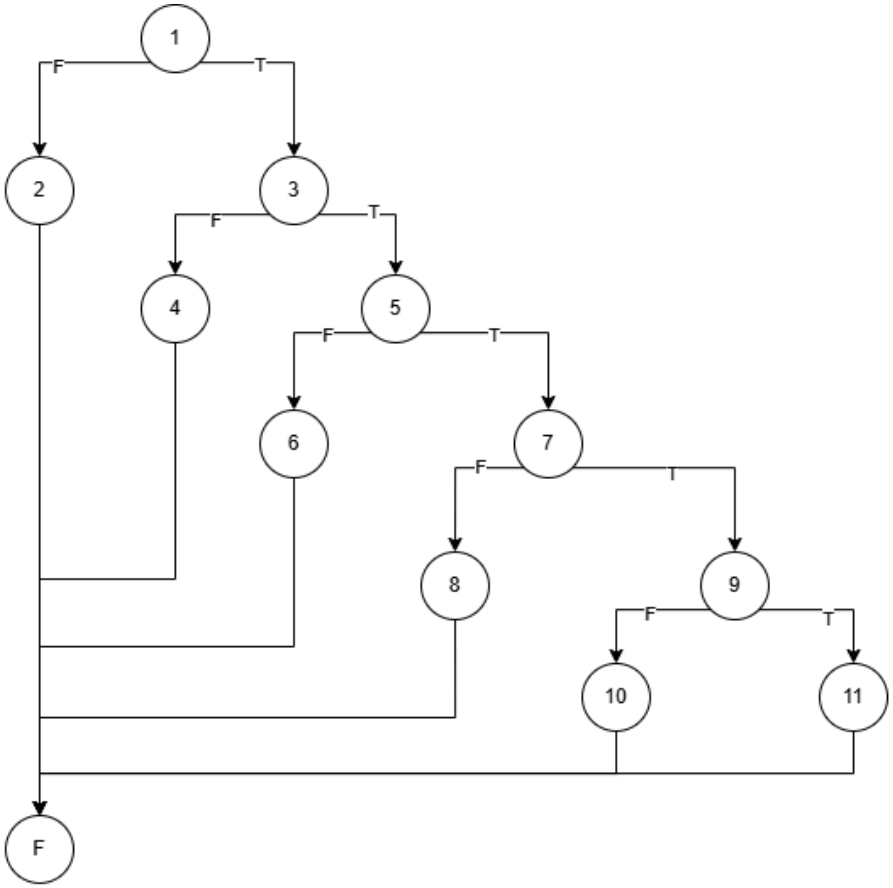

Complexity: 16E - 12N + 2 = 6 paths

No additional test cases for loops are defined, as the method does not contain any iterative loops.

UNIVERSIDAD CARLOS III DE MADRID | Software Development – 2026

Professor: Juan Luis Vicente Carro

Submission Date: 24 April 2026

3. TEST EXECUTION EVIDENCE:

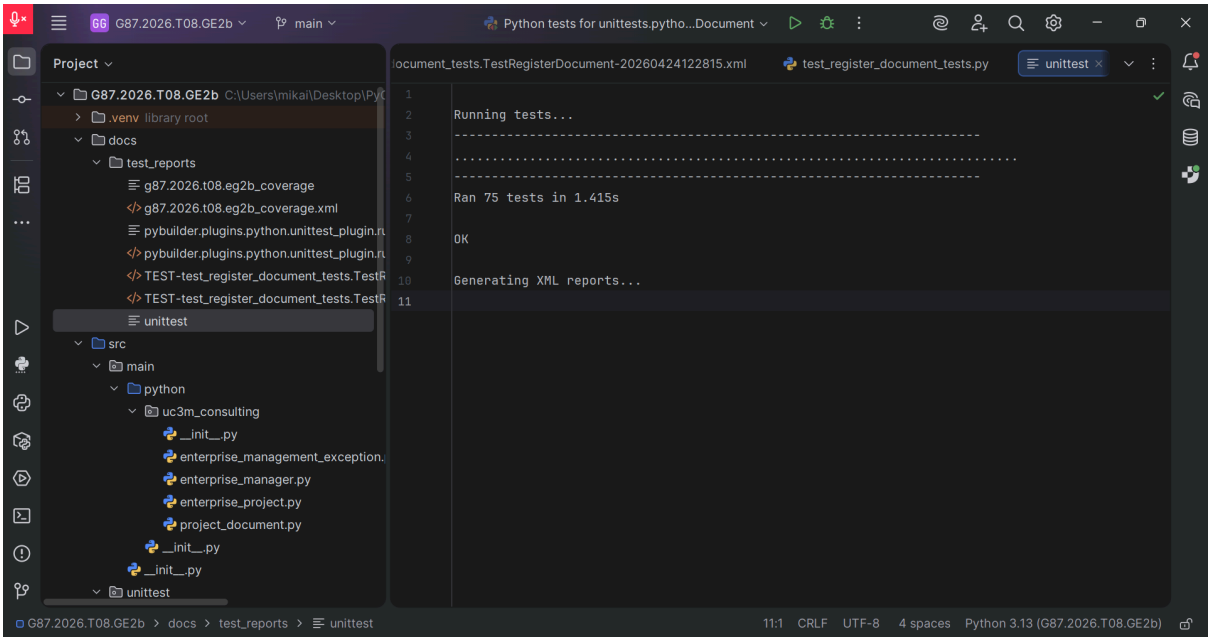
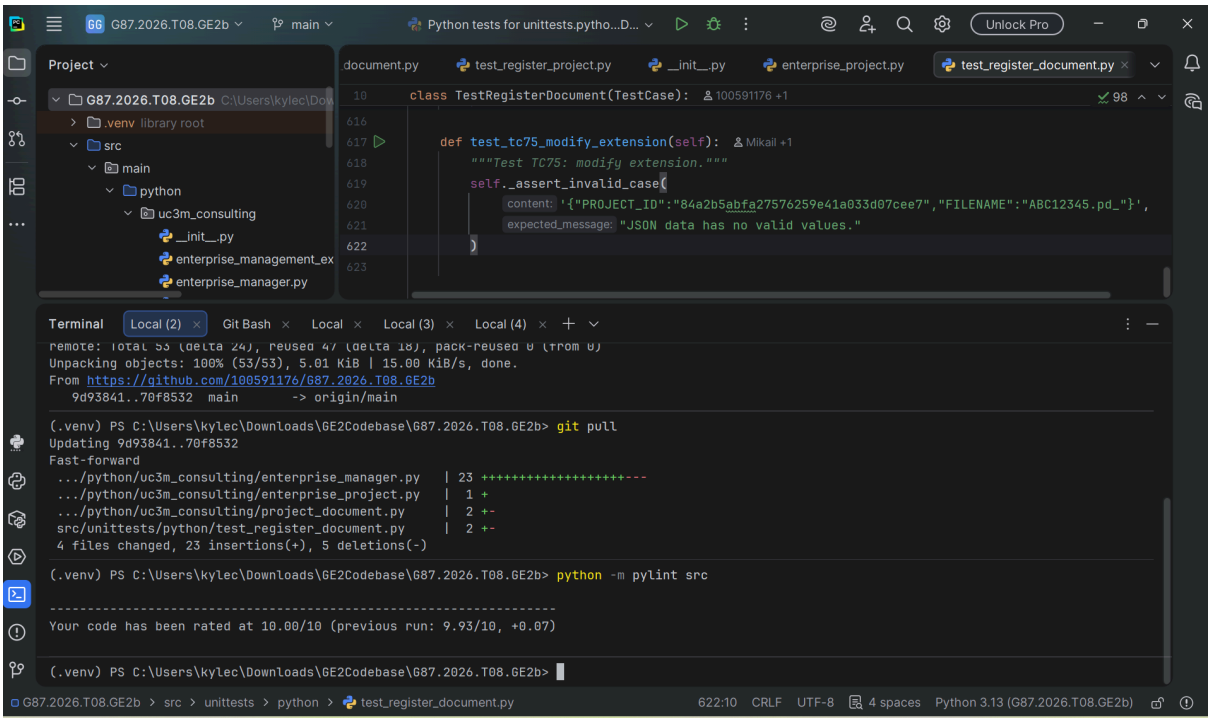
4. PYLINT: